INNOSTAVIA YMPÄRISTÖJÄ
TIETEELLE JA TUTKIMUKSELLE

VISU weighting table installation instructions

Weighing table with a metal base

Free-standing on the floor, must be placed away from other furniture and walls. Damping elements made of rubber are installed under the metal base and between the metal base and the stone at each corner.

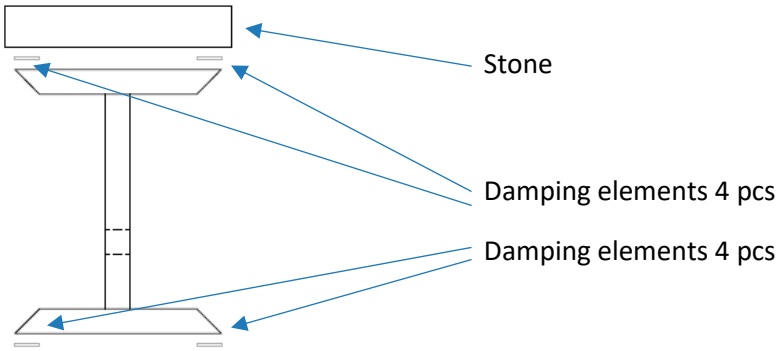

Weighing table with stone base

Free-standing on the floor, must be placed away from other furniture and walls. The base structure is connected as shown with the included parts. Damping elements are installed under the stone base and between the stone base and the horizontal stone at each corner.

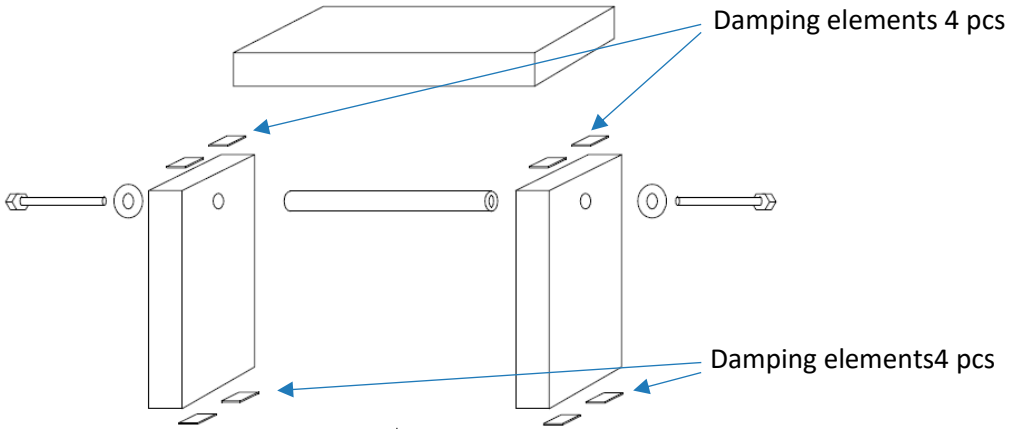

SERTIFIOITU JOHTAMISJÄRJESTELMÄ
DNV
ISO 9001 • ISO 14001

VISU KALUSTE OY

Eeliksentie 6, 34870 Visuvesi, Finland visu@visu.fi visu.fi