INNOSTAVIA YMPÄRISTÖJÄ
TIETEELLE JA TUTKIMUKSELLE

Local Exhaust Arm O-KP

- **Product name:** OPPILab Local Exhaust Arm
- **Product code**: O-KP
- **Intended use:** Local exhaust system for classrooms and laboratories to remove hazardous gases and airborne particles
- **Suitable for:** Comprehensive schools and upper secondary schools
- **Arm:** Ø 50 mm anodized aluminum
- **Joints:** Polypropylene – lightweight and durable
- **Connection:** Patented friction joint – stable and flexible
- **Airflow:** Optimized airflow with low pressure loss and quiet operation
- **Installation:** Wall-mounted, bench-mounted or ceiling-mounted

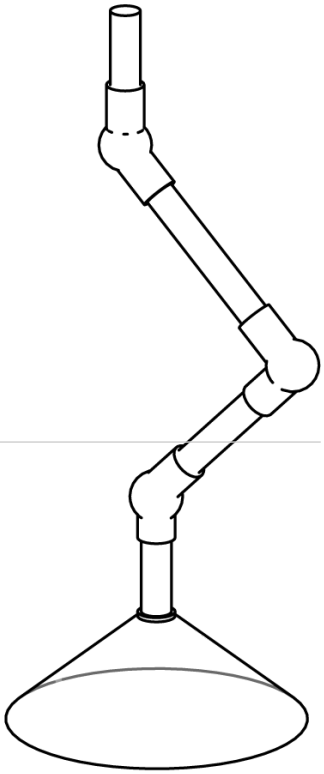

November 26, 2026 - Rights to changes reserved.

VISU KALUSTE OY
Eeliksentie 6, 34870 Visuvesi, Finland
visu@visu.fi
+358 44 749 4940
visu.fi