INNOSTAVIA YMPÄRISTÖJÄ
TIETEELLE JA TUTKIMUKSELLE

Under-Whiteboard Cabinet O-TAK10

- **Product name:** OPPILab under-whiteboard cabinet
- **Product code:** O-TAK10
- **Intended use:** Storage cabinet for the front wall of a classroom
- **Suitable for:** Comprehensive schools and upper secondary schools
- **Construction:** Laminate cabinet construction
- **Width:** 400/500/600 mm
- **Depth:** 340 mm
- **Height:** 550 mm + 30 mm top
- **Shelves:** 1 adjustable shelf
- **Door:** Solid door
- **Colour:** White cabinet base, doors available in white or coloured laminate
- **Accessories:** 150 mm metal plinth

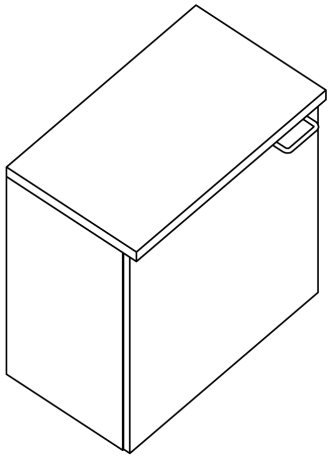

November 26, 2026 - Rights to changes reserved.

VISU KALUSTE OY
Eeliksentie 6, 34870 Visuvesi, Finland
visu@visu.fi
+358 44 749 4940
visu.fi