INNOSTAVIA YMPÄRISTÖJÄ
TIETEELLE JA TUTKIMUKSELLE

Tray Trolley O-TV2

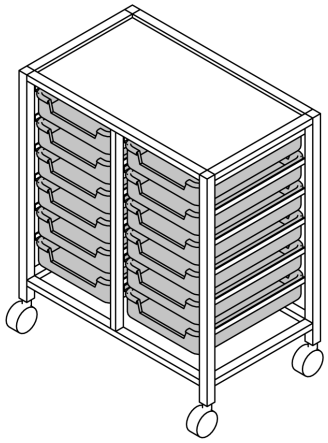

- **Product name:** OppiLab tray trolley 2
- **Product code:** O-TV2
- **Intended use:** Storage and transportation of teaching materials and supplies
- **Suitable for:** Comprehensive schools and upper secondary schools
- **Construction:** Metal frame with plastic trays
- **Width:** 730 mm
- **Depth:** 440 mm
- **Height:** 735 mm or 860 mm
- **Trays:** according to the height; 10 or 12 × F1 trays
- **Castors:** 4 castors, 2 of which are lockable
- **Colour:** Standard colour white
- **Tray colours:** Grey, blue, yellow, green or transparent

November 26, 2026 - Rights to changes reserved.

VISU KALUSTE OY
Eeliksentie 6, 34870 Visuvesi, Finland
visu@visu.fi
+358 44 749 4940
visu.fi